C.I.P.	25 Rem.	TAB.	I
		Date	84-06-14
	Country of Origin: US	Revision	02-05-15

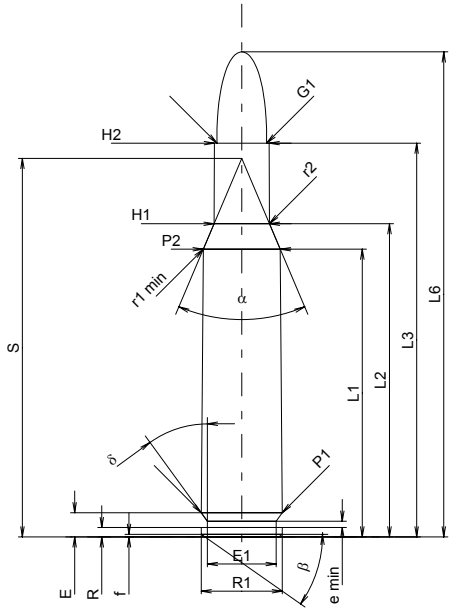

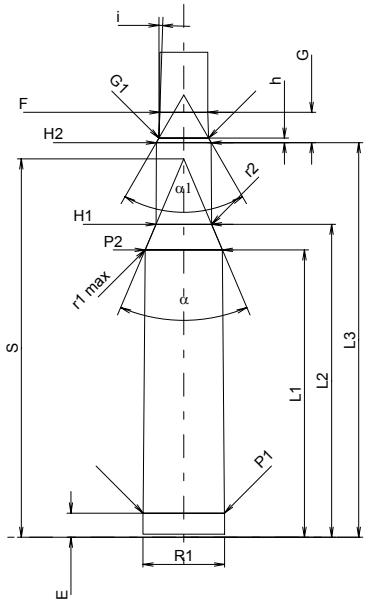

Scale 1:1

CARTRIDGE MAXI

Lengths

L1 1)	=	38.05	-0.20
L2 1)	=	41.42	-0.20
L3 1)	=	52.07	
L4	=		
L5	=		
L6	=	64.14	

Case Head

R	=	1.24
R1	=	10.72
R3	=	
E	=	3.20
E1	=	9.09
e min	=	0.84
δ	=	36°
f	=	0.33
β	=	35°

Powder Chamber

P1	=	10.72	
P2 1)*	=	10.19	-0.20

Junction Cone

α *	=	46°
S *	=	50.05
r1 min	=	0.64
r2	=	2.54

Collar

H1 *	=	7.33
H2 1)	=	7.26

Projectile

G1 1)	=	6.58
G2	=	
F	=	
L3+G 1)	=	56.07

Pressures (Energies)
Method Transducer

Pmax	=	2450	bar
PK	=	2817	bar
PE	=	3063	bar
M	=	25.00	
EE	=	1995	Joule

Miscellaneous Dimensions

Fe 1)	=	0.15
delta L	=	

CHAMBER MINI

Lengths

L1	=	38.01
L2	=	41.40
L3 1)	=	52.20

Breech

R	=	
R1	=	10.78
R2	=	
R3	=	
r	=	

Powder Chamber

E	=	3.20
P1 1)	=	10.75
P2 *	=	10.22

Junction Cone

α 1)*	=	46°
S *	=	50.05
r1 max	=	0.64
r2	=	2.54

Collar

H1 *	=	7.34
H2 1)	=	7.26

Commencement of Rifling

G1 1)*	=	6.58
G 1)	=	4.00
α1 *	=	60°
h	=	0.59
s	=	
i 1)*	=	1°55'59"
w	=	

Barrel

F 1)*	=	6.35
Z 1)	=	6.50

Grooves

b	=	2.41	
N	=	6	
u	=	254.00	
Q	=	32.78	mm²

Dimensions in << mm >>
Dimensions and Tolerances for Proof Barrels
see Appendix CR 1.

Notes: 1) Check for safety reasons
* Basic dimensions